MiniMod4 Evaluation Kit

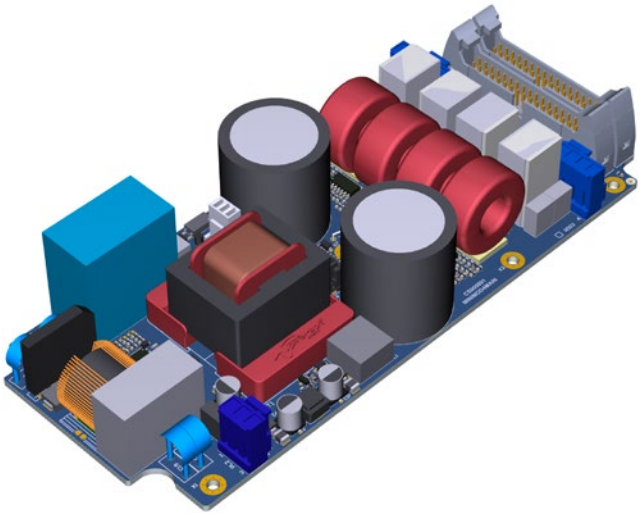

User guide

Intentionally left blank

WE RECOMMEND THAT ALL OPERATIONS ARE CARRIED OUT BY A TECHNICIAN IN THE MANNER DESCRIBED IN THIS GUIDE.

IF NOT EXPLICITLY STATED OTHERWISE, DISCONNECT THE AMPLIFIER FROM THE MAINS BEFORE OPERATING THE AMPLIFIER.

WARNING! INTERNAL CAPACITORS BANK COULD BE CHARGED AND HARMFUL: TAKE CARE OF COMPLETELY DISCHARGE INTERNAL CAPACITORS BANK BEFORE HANDLING THE DEVICE

This technical document aims to be a support guide in testing the MiniMod4 power amplifier modules.
This documentation contains proprietary information which is the sole property of Powersoft S.p.A.
These documents are confidential and reserved and may not be disclosed, reproduced and shared with third persons or used without the express written permission from Powersoft S.p.A.
Data are subject to change without notice.

1. Introduction

1.1 Purpose of this guide

This guide contains important instructions and general information concerning the use and testing of Powersoft MiniMod4 amplifier platform.

Please refer to the following paragraphs for a quick-start guide on testing MiniMod4 performance and audio quality, along with the Evaluation Board.

Please don't hesitate to contact us at support.audio@powersoft.it, should you require further information.

1.2 Content of the Kit

- 1x MiniMod4 (PF000477)
- 1x Evaluation Board Kit (KTP00477), containing:
  - 1x Evaluation Board (CS000914)
  - 2x 34p IDC ribbon cables (CB000350)
- 1x Cable Kit (KT000349), containing:
  - 1x Mains Cable (CB000727.00)
  - 2x SE output cable (CB000731.00)
  - 1x BTL output cable (CB000730.00)
  - 1x PTL output cable (CB000733.00)
  - 1x PBTL output cable (CB000732.00)

INDEX

2. Assembling the kit

2.1 EVB to Amplifier

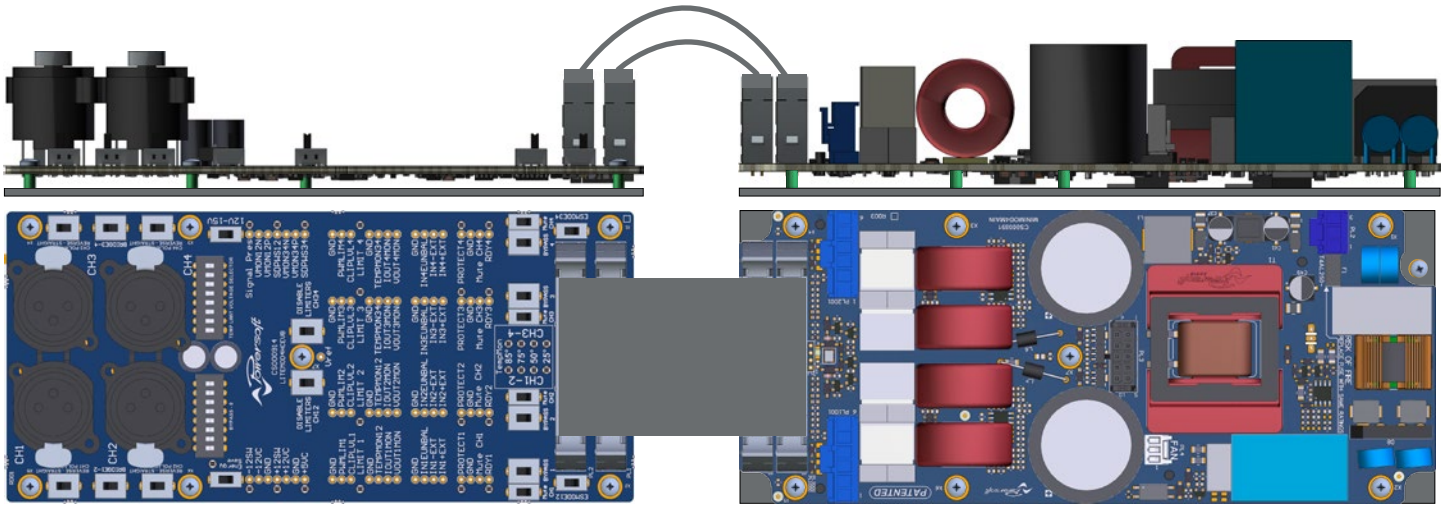

2.2 Mains cable

Connect the mains power cable (pictured) to the PL2 connector highlighted on the picture below, and fasten the ground termination to the screw indicated on the same picture (M4 nut not included).

PL2 mating connector (JST)
Housing: VHR-3N
Contacts: SVH-21T-P1.1 (22~18 AWG)
SVH-41T-P1.1 (20~16 AWG)

PL2 - AC Mains Connector	
PIN 1	AC MAINS L
PIN 2	not connected
PIN 3	AC MAINS N
	GROUND ⏚

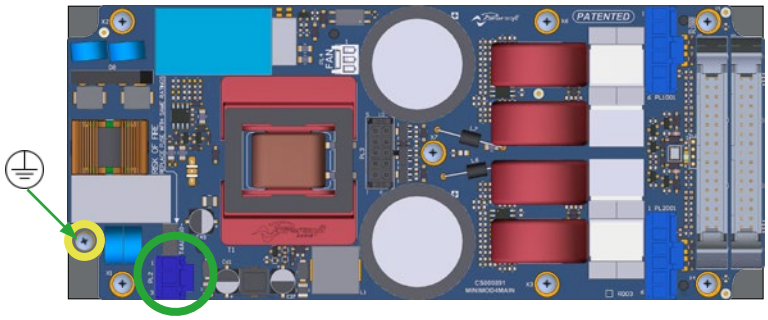

2.3 Fan (Optional)

The fan (not included) can be connected the the PL2 connector highlighted on the picture below.

PL4 mating connector (Molex)
Housing: 22-01-2035
Contacts: 0008500032 (30~22 AWG)

PL4 - FAN Connector	
PIN 1	GND
PIN 2	+12VDC, 100 mA max
PIN 3	GND

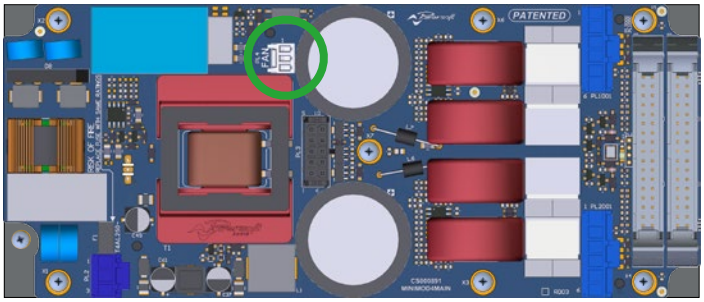

INDEX

3. Testing the MiniMod4

3.1 Setup

Connect the MiniMod to the EVB as illustrated (chapter 2.1).
Select test configuration (4xSE/ 2xBTL/ 2xSE+1xBTL/ 2xPTL/ 1xPBTL), then connect input XLR(s) and Output cable(s) as described in following chapter (3.2)
Note that MiniMod4 outputs #2#4 are reversed polarity (input-to-output, for easy bridge-coupling of odd-even channels): in order to maintain coherent input-to-output signal path polarity, please take extra care in following wirings/switches instructions below.

3.2 Choosing configuration

3.2.1 4x SE

Use this setup for testing MiniMod4 as a 4IN-4OUT platform, rated 4x 150W @4Ohm. Please follow diagram below for setup configuration.

Use 2x CB000731, included in the evaluation kit.

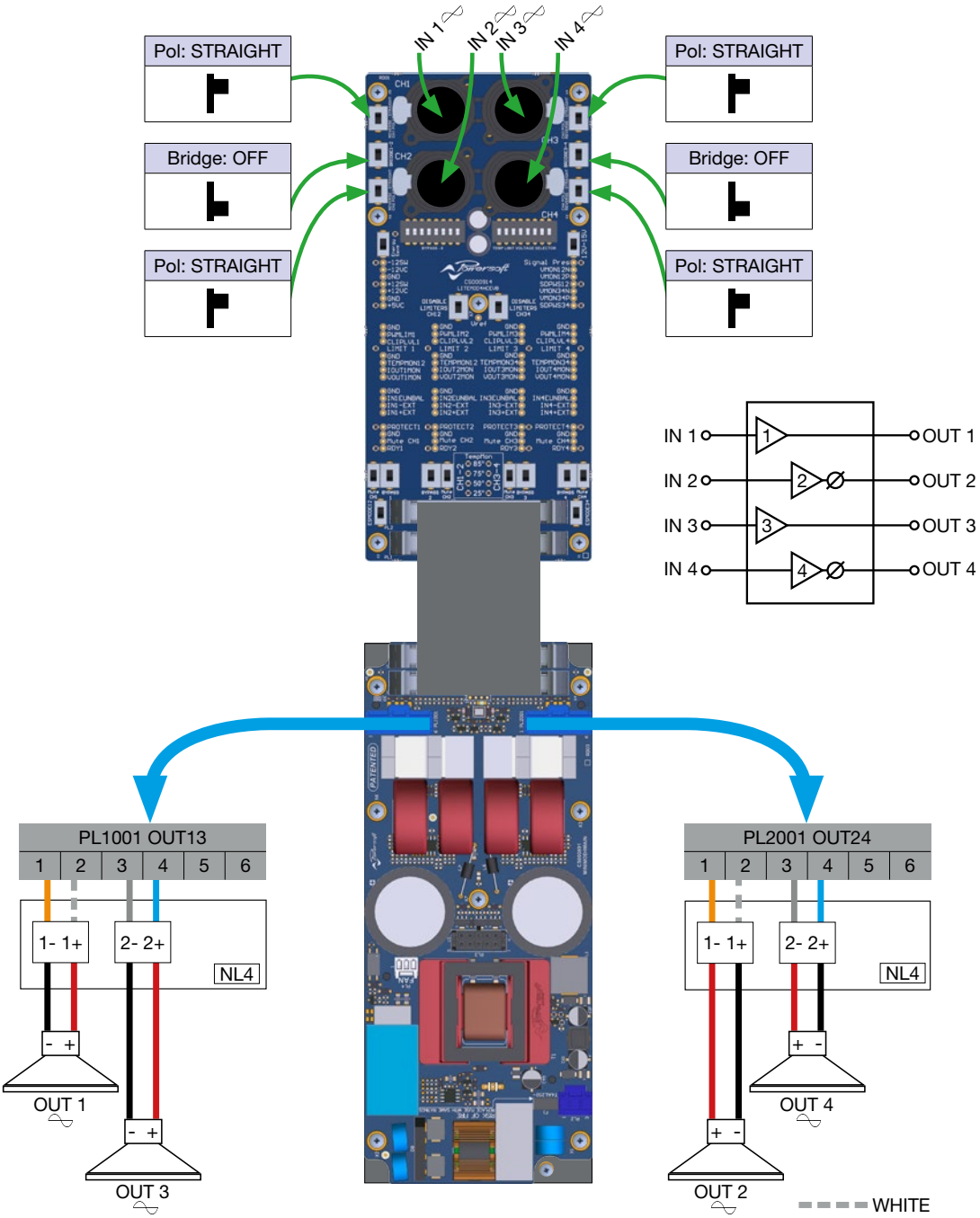

3.2.2 2x BTL

Use this setup for testing MiniMod4 as a 2IN-2OUT platform, rated 2x 300W @8Ohm. Please follow diagram below for setup configuration.

Warning: Connect header with white/grey wires to PL1001 to maintain the correct polarity of the Speakon contacts.

Use CB000731, included in the evaluation kit

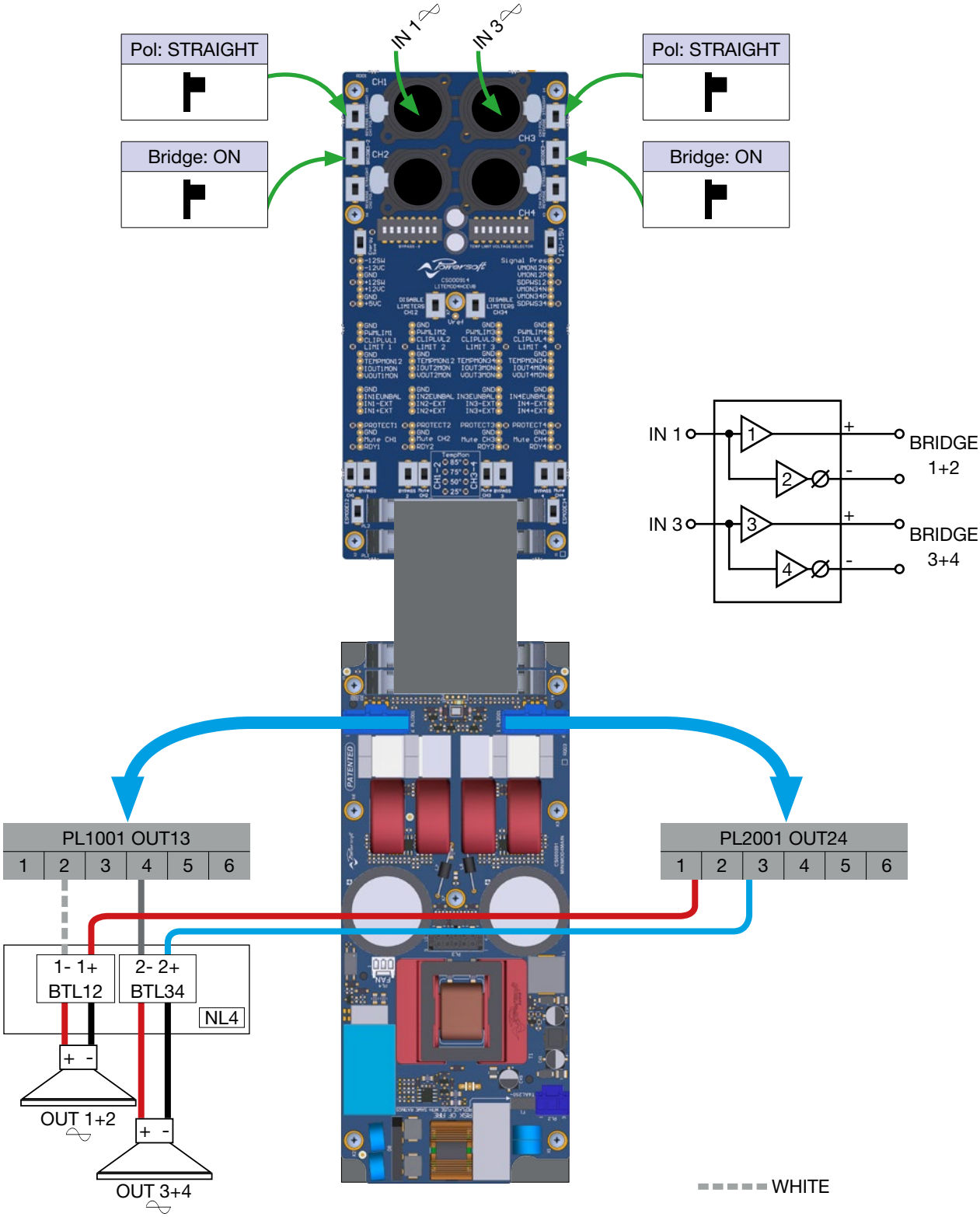

3.2.3 2x SE + 1x BTL

Use this setup for testing MiniMod4 as a 3IN-3OUT platform, rated 2x (150W @4Ohm) + 1x (300W @8ohm). Please note that output cable for this configuration is NOT included in the evaluation kit.
Follow diagram below to custom-build the output cable.

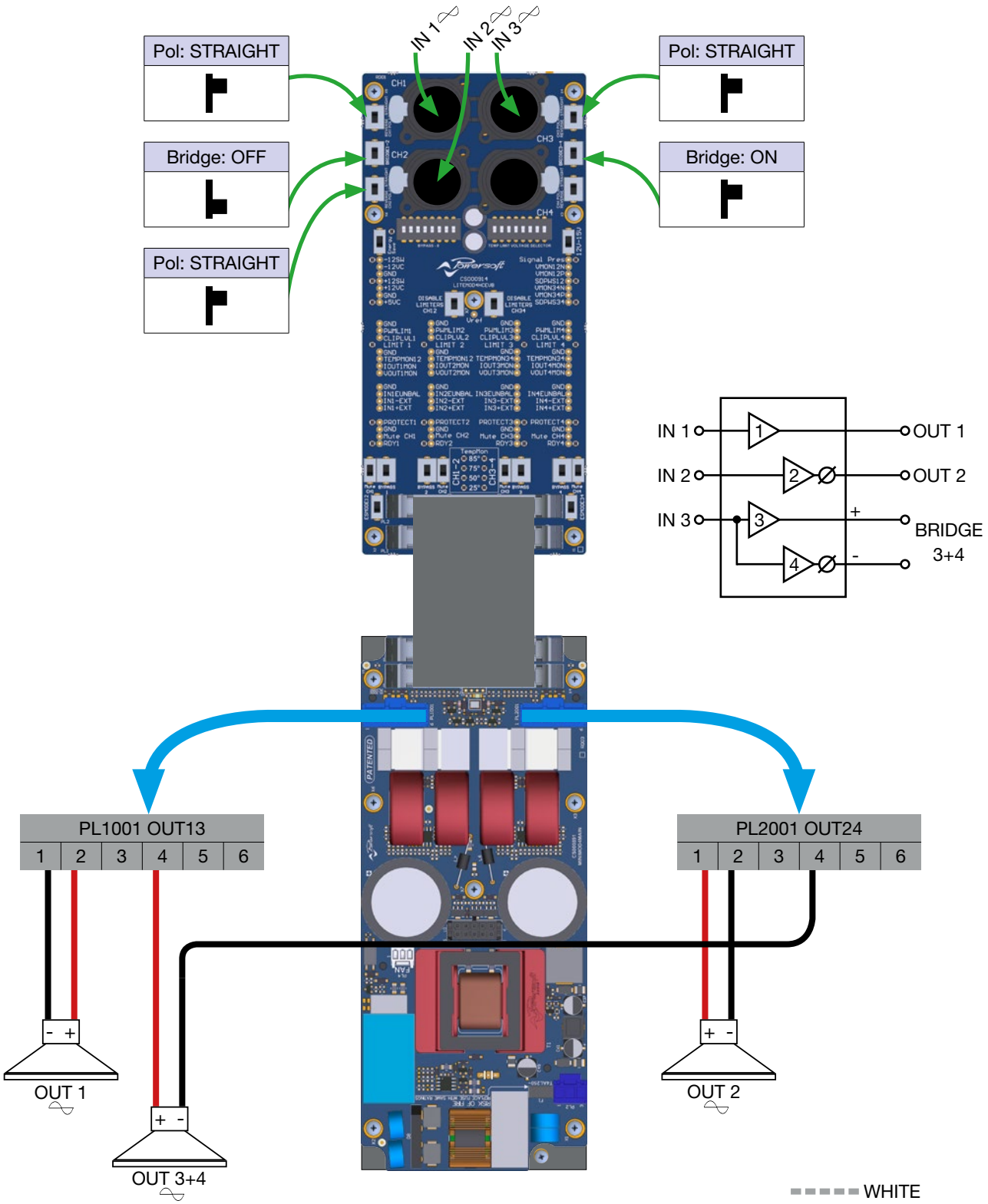

3.2.4 2x PTL

Use this setup for testing MiniMod4 as a 2IN-2OUT platform, rated 2x 300W @2Ohm. Please follow diagram below for setup configuration.

Warning: Speakon pair going to PL2001 (OUT2) has reversed polarity: negative on 2+ and positive on 2-.
Please pay attention to connect 2+/2- to PL2001 (OUT2)

Use CB000733, included in the evaluation kit

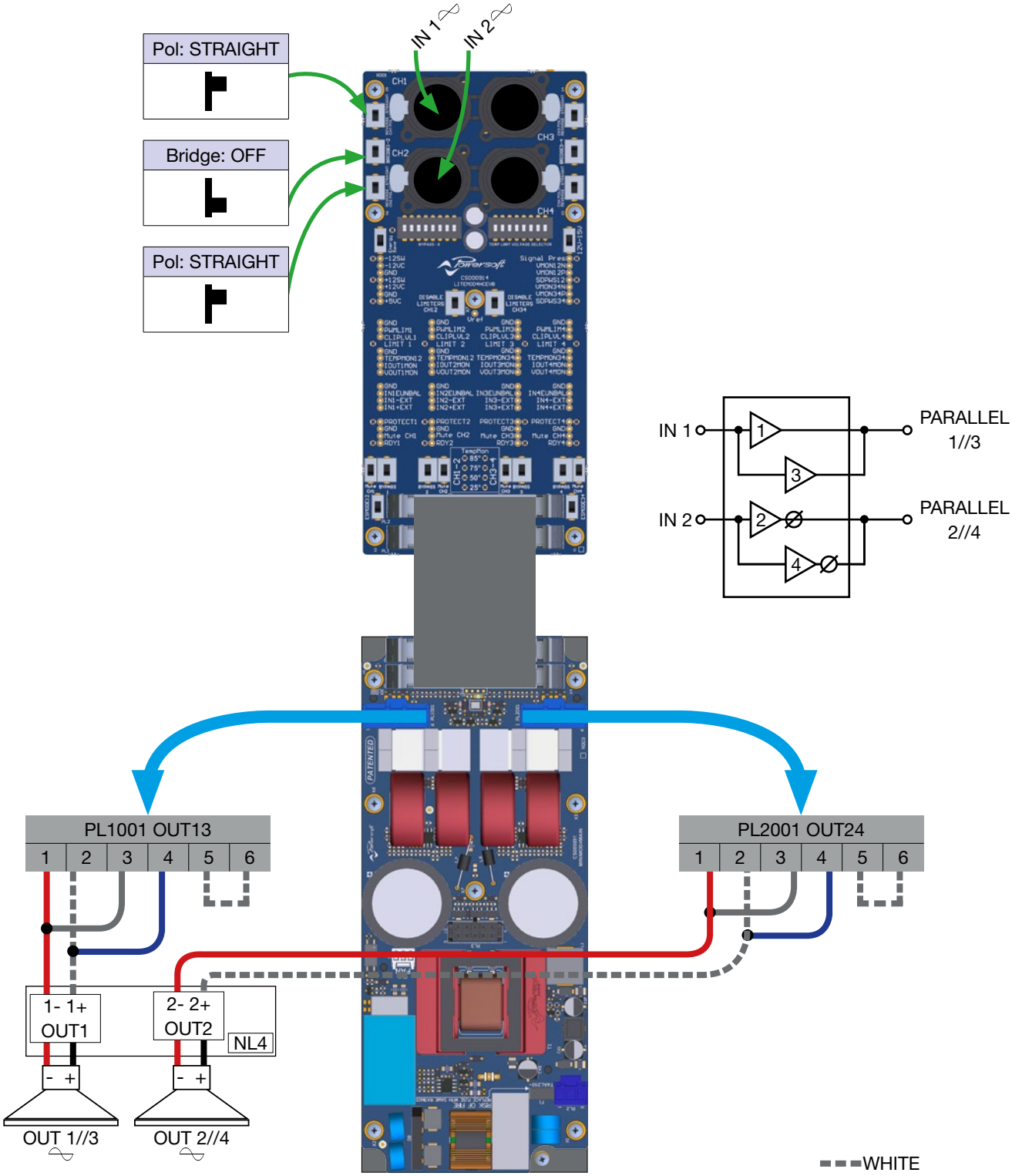

INDEX

3.2.5 1x PBTL

Use this setup for testing MiniMod4 as a 1IN-1OUT platform, rated 1x 600W @4Ohm. Please follow diagram below for setup configuration.

Warning: Header connected to Speakon 1+ must be plugged to PL1001, header connected to speakon 1- must be plugged to PL3001.

Use CB000732, included in the evaluation kit

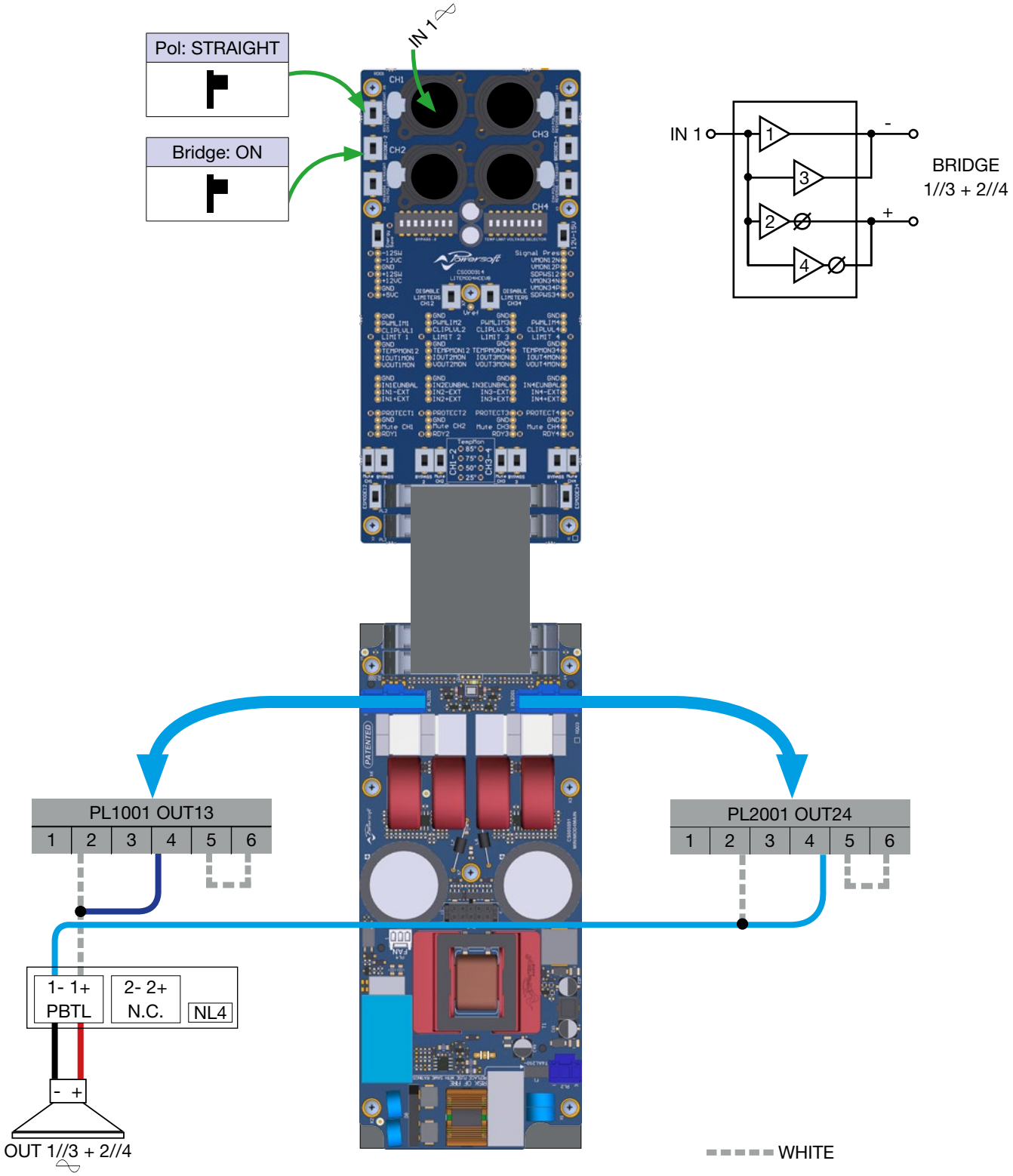

3.3 Thermal Limiter THR

Thermal limiter monitors TEMPMON12-34 signals coming from the modules connected to each output connector of evaluation board. Once TEMPMON signal matches the threshold set, the limiter starts reducing input signal of related couple of channels.

Threshold of thermal limiter must be setup adjusting the switches of “TEMP LIMIT VOLTAGE SELECTOR” as described in the table below. Threshold will be the same for all channels.

TEMP LIMIT VOLTAGE SELECTOR									
	1	2	3	4	5	6	7	8	Threshold ID
	OFF	ON	OFF	OFF	OFF	OFF	OFF	OFF	g
	OFF	ON	ON	OFF	OFF	OFF	OFF	OFF	f
	OFF	ON	ON	ON	OFF	OFF	OFF	OFF	e
	OFF	ON	ON	ON	ON	OFF	OFF	OFF	d
	OFF	ON	ON	ON	ON	ON	OFF	OFF	c
	OFF	ON	ON	ON	ON	ON	ON	OFF	b
	OFF	ON	ON	ON	ON	ON	ON	ON	a

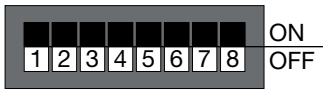

For Minimod4, heatsinked on a standard aluminum plate, the setup that guarantee operation continuity without any thermal shut down intervention, are thresholds #c. Lower thresholds are allowed to be set, but additional precautions must be taken if it is wanted to avoiding module going into a thermal shut down.

Plate Temperature (°C)	TEMPMON12-34	Threshold ID
25	2.62	
30	2.42	
35	2.22	a
40	2.02	
45	1.83	
50	1.65	b
55	1.49	
60	1.33	
65	1.2	
70	1.07	
75	0.96	c
80	0.86	d
85	0.77	
90	0.69	
95	0.62	

Tempmon vs. Temperature for Minimod4 (measured with a not-heatsinked amplifier)

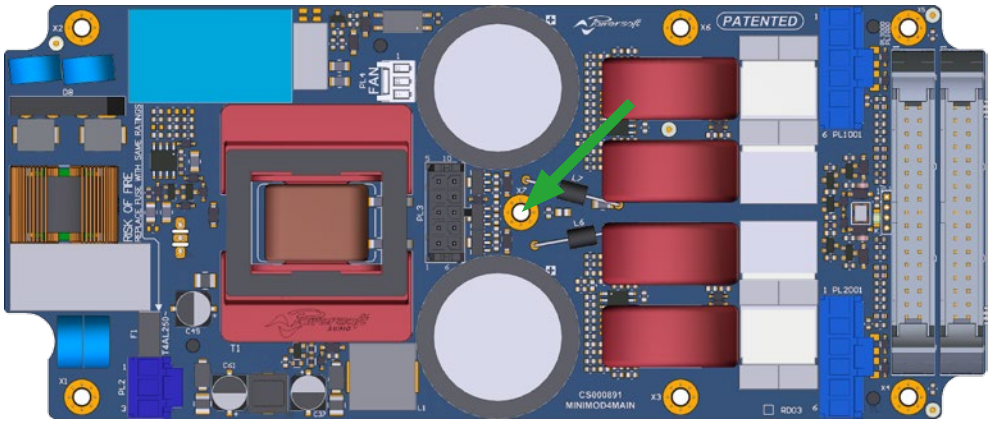

Temperature is Measured on the metal plate underneath indicated point.

3.4 Clip limiter + limiter bypass

A clip limiter limits a max THD of output signal of about 3%. This limiter cannot be adjusted by the user. Threshold has been intentionally set to a high THD value in order to get a maximum output power while having an acceptable distortion. Clip limiter threshold drops when thermal limiter is engaged.

Thermal and voltage limiters can be enabled (ON status) or disabled by these switches. When the switches are enabled limiters are not working but differently by the bypass function, signal pass through internal preamplifier stage anyway. The purpose of this feature is a quick A/B comparison of amplifier with or without clip limiter active.

3.5 Mute/Unmute

Couples of channels CH1-CH3 and CH2-CH4 can be muted or unmuted by acting on the switch “MUTE” of related channels. When muting a channel, PWM generator stage is disabled.

MUTE CH1	MUTE CH2	MUTE CH3	MUTE CH4	CH1	CH2	CH3	CH4
ON				MUTED		MUTED	
	ON				MUTED		MUTED
		ON		MUTED		MUTED	
			ON		MUTED		MUTED

3.6 Energy Save

Evaluation board is provided of a signal detection circuit having a wake up threshold of about -59dBV. If Energy save Active, after 10sec of a lack of signal detection, it goes into “shut down / auto mute” state. Depending on the status of ESMODE switch Its behavior may change as follow:

If ESMODE ON: When Energy Save Mode is enabled a Shut down of Power Supply of the module (connected to the related output connector).

If ESMODE OFF: Energy Save status leads to a mute of channels of related connector (disable output stage PWM generator power supply is not shut down).

3.7 AUX Voltage selector

By default most of Powersoft modules provide an auxiliary supply voltage of +/-12V. By activating (ON status) this switch, Minimod4 provide an auxiliary volt of +/-15V available on MiniMod4 only.

INDEX

3.8 TempMon LED bar

A LEDs light bar indicates 4 different thresholds as listed in the table below. Temperatures indicated on the scale must be considered only as an indication and are strongly dependent from the module used along with evaluation board.

LED	Turn on/off Threshold (V)
25°	2.5
50°	1.65
75°	0.93
85°	0.826

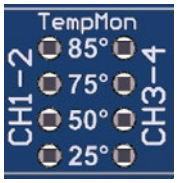

3.9 Bypass entire EVB

When bypassing a channel of evaluation board, the signal goes directly from XLR input connectors to DIL 34 poles output connectors. In this way, evaluation board can be transformed in a passive XLR input board, routing audio signals straight from the input XLRs to the amplifier inputs (polarity reverse and bridge switches are disabled too).

The following position of switches “Bypass_0” “Bypass_01” “Bypass_2” “Bypass_3” “Bypass_4” should be set:

Channel to be bypassed	BYPASS_0								BYPASS_1-4			
	1	2	3	4	5	6	7	8	1	2	3	4
CH1	OFF	OFF	-	-	-	-	-	-	ON	-	-	-
CH2	-	-	OFF	OFF	-	-	-	-	-	ON	-	-
CH3	-	-	-	-	OFF	OFF	-	-	-	-	ON	-
CH4	-	-	-	-	-	-	OFF	OFF	-	-	-	ON

In order to activate the internal limiters of demo board, the above described switches must be set in the opposite position as follow.

Channel to be activated	BYPASS_0								BYPASS_1-4			
	1	2	3	4	5	6	7	8	1	2	3	4
CH1	ON	ON	-	-	-	-	-	-	OFF	-	-	-
CH2	-	-	ON	ON	-	-	-	-	-	OFF	-	-
CH3	-	-	-	-	ON	ON	-	-	-	-	OFF	-
CH4	-	-	-	-	-	-	ON	ON	-	-	-	OFF

When EVB bypass is active, the following features are still available: TEMP LED BAR, MUTE, energy save (+ energy save mode selection).

4. EVB Detailed description

4.1 Switch functions

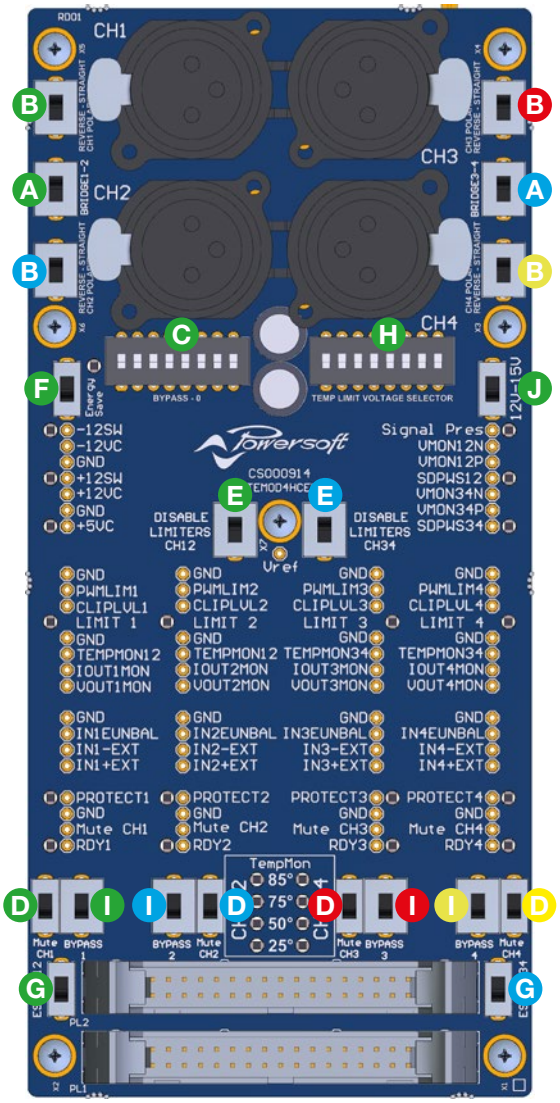

	Description	Status	
A	CH1-CH2 Bridge Mode		OFF
A	CH3-CH4 Bridge Mode		OFF
B	CH1 Polarity Reverse		ON
B	CH2 Polarity Reverse		ON
B	CH3 Polarity Reverse		ON
B	CH4 Polarity Reverse		ON
C	Bypass 1/2/3/4		ON
D	CH1 Mute		OFF
D	CH2 Mute		OFF
D	CH3 Mute		OFF
D	CH4 Mute		OFF
E	Voltage Limiter Disable CH 1-2		ON
E	Voltage Limiter Disable CH 3-4		ON
F	Energy Save		ON
G	ESMODE CH1-2		OFF
G	ESMODE CH2-3		OFF
H	Thermal Limiter Threshold Setup		ON
I	CH1 Bypass		OFF
I	CH2 Bypass		OFF
I	CH3 Bypass		OFF
I	CH4 Bypass		OFF
J	Auxilliary Voltage Selector		OFF

	Switch	Status ON	Status OFF
A	Bridge Mode	Ch1 routed to both Ch1, Ch2 Ch3 routed to both Ch3, Ch4	Each input connector is routed on its related channel
B	Polarty Reverse	Reverse polarity for each input XLR (see block diagram for better comprehension of Polarity Reverse insertion point)	Standard polarity
C	Bypass 1/2/3/4	Output sourced directly from input XLRs. When ON, all EVB limiting circuitry is bypassed (use in conjunction with Bypass – 0 dip switch)	Input signal pass through internal limiters.
D	Mute	Mute related channel (disable output stage PWM generator)	Related channel unmuted
E	Limiters Disable	thermal and voltage limiters disabled. Signal pass through internal preamplifier stage anyway.	hermal and voltage limiters engaged.
F	Energy Save	Energy save Active: after 10sec that input signal is not detected, it goes into “shut down / auto mute” state depending on the status of ESMODE switch; it wakes up if signal is detected (wake up threshold -59dBV).	Energy save disabled.
G	ESMODE	When Energy Save Mode is enabled this status shuts down the Power Supply of the module (connected to the related output connector)	When Energy Save Mode is enabled this status mutes all channels of related connector (disable output stage PWM generator power supply is not shut down).
H	Thermal Limiter Threshold Setup	Set threshold according to the attached table amplifier dependant too.	
I	Bypass 1-4	Signal goes to inner limiter circuitry.	Signal disconnected from internal limiters. In order to completely bypass inner circuitry, Input bypass should be OFF and Limiter Bypass ON
J	Auxilliay Voltage Selector	Sets Minimod4 having auxiliary voltage of +/-15V.	Minimod4 has a default auxiliary voltage of +/-12Vdc

INDEX

4.2 Test points

Test Point	Description	Scale/Full Scale (For Minimod4)
GND	Ground	
PWMLIM1 (2,3,4)	Thermal Limiter Status (active high)	
CLIPVL1 (2,3,4)	Voltage Limiter Threshold dependent from rail voltage	
TEMPMON12 (34)	Signal monitoring the thermal status of amplifier stages.	See table below
IOUT1MON (2,3,4)	Output Current monitor (scale dependent from connected module)	8A/V
VOUT1MON (2,3,4)	Output Voltage monitor (scale dependent from connected module)	20V/V
IN1EUNBAL (2,3,4)	Unbalanced Input Signal (in phase and compared to IN-)	1V/V
IN1-EXT (2,3,4)	Balanced Negative Input Signal (at IDC output connector)	1V/V (±1%)
IN1+EXT (2,3,4)	Balanced Positive Input Signal (at IDC output connector)	1V/V (±1%)
PROTECT1 (2,3,4)	Protection Circuit Detection (active low)	4.6V
Mute CH1 (2,3,4)	Channel Mute (active low)	8V
RDY1 (2,3,4)	Channel Ready to play (signal dependent from connected module)	2V
VMON12N	Negative rail Monitor Channels 1,2	20V/V
VMON12P	Positive rail Monitor Channels 1,2	20V/V
VMON34N	Negative rail Monitor Channels 3,4	20V/V
VMON34P	Positive rail Monitor Channels 3,4	20V/V
SDPWS12	Shut Down Power Supply Signal (active high) engaged by Energy safe mode.	4.5V
SDPWS34	Shut Down Power Supply Signal (active high) engaged by Energy safe mode.	4.5V
-12SW	Auxiliary Negative Supply Voltage (switched when engaging energy safe mode)	1V/V
-12VC	Auxiliary Negative Supply Voltage (as supplied by module)	1V/V
+12SW	Switched Auxiliary Positive Supply Voltage (switched when engaging energy safe mode)	1V/V
+12VC	Auxiliary Positive Supply Voltage (as supplied by module)	1V/V
+5VC	Auxiliary Positive +5V Supply Voltage (as supplied by module)	1V/V

INDEX

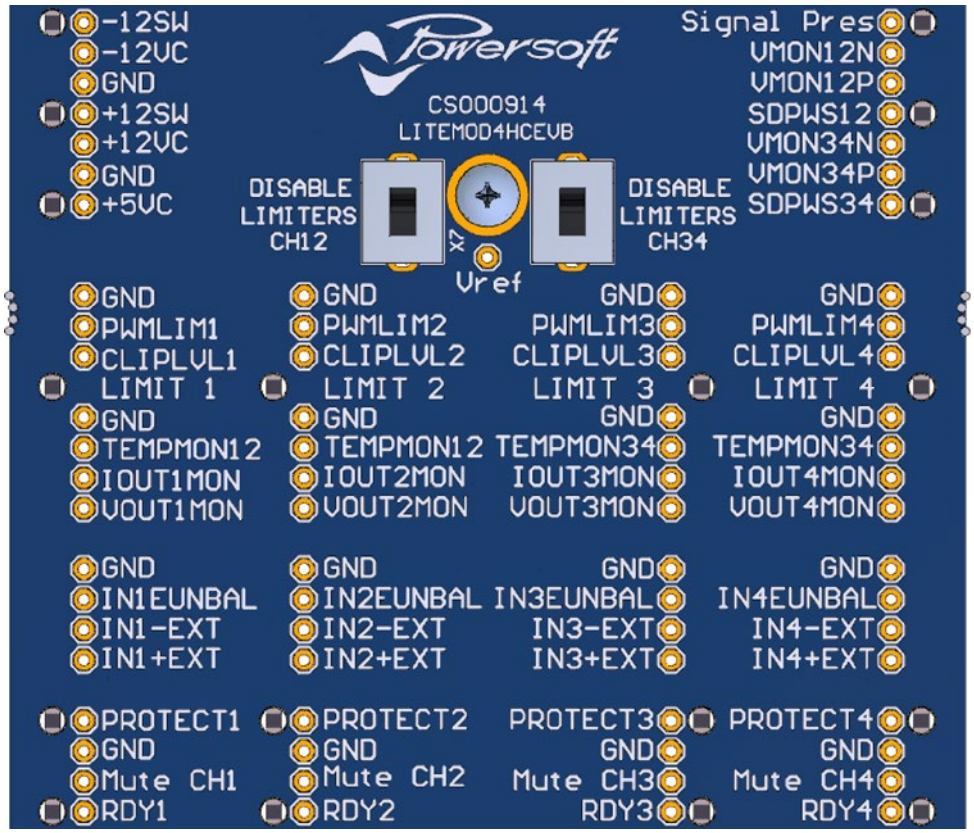

4.3 LED Description

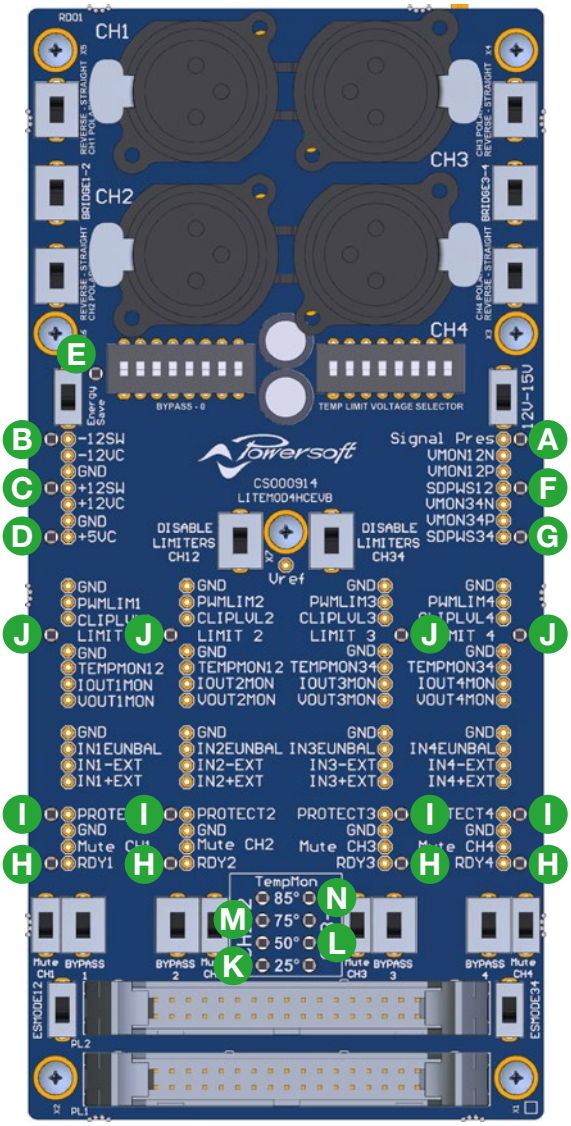

	LED	Color	ON	OFF
A	SIGNAL PRES	GREEN	Signal presence on input connectors	Absence of signal at input connectors
B	12SW -12VC	GREEN	Presence of -12V auxiliary voltage	Absence of -12V auxiliary voltage. Switched off in case Energy Save status engaged
C	+12SW +12VC	GREEN	Presence of +12V auxiliary voltage	Absence of +12V auxiliary voltage. Switched off in case Energy Save status engaged
D	+5VC	GREEN	Presence of +5VC auxiliary voltage	absence of +5VC auxiliary voltage
E	Energy Save	GREEN	When Energy save engaged	When energy save OFF
F	SDPWS12	GREEN	When SDPWS enabled by Energy save status	When SDPWS disabled
G	SDPWS34	GREEN	When SDPWS enabled by Energy save status	When SDPWS disabled
H	RDY1,2,3,4	GREEN	When related channel in Ready Status	When related channel not in Ready Status
I	PROTECT1,2,3,4	RED	When related channel in Protect Status	When related channel not in Protect Status
J	LIMIT1,2,3,4	AMBER	When limiter of related channel is engaged	When limiter of related channel is not engaged
K	TEMPMON12, 34 - 25°C	GREEN	When TEMPMON of related channel pair is < 2.56V	When TEMPMON of related channel pair is > 2.56V
L	TEMPMON12, 34 - 50°C	AMBER	When TEMPMON of related channel pair is < 1.65V	When TEMPMON of related channel pair is > 1.65V
M	TEMPMON12, 34 - 75°C	AMBER	When TEMPMON of related cchannel pair is < 0.93V	When TEMPMON of related channel pair is > 0.93V
N	TEMPMON12, 34 - 85°C	RED	When TEMPMON of related channel pair is < 0.826V	When TEMPMON of related channel pair is > 0.826V

5. Appendix

5.1 MiniMod4 description

5.1.1 Silkscreen

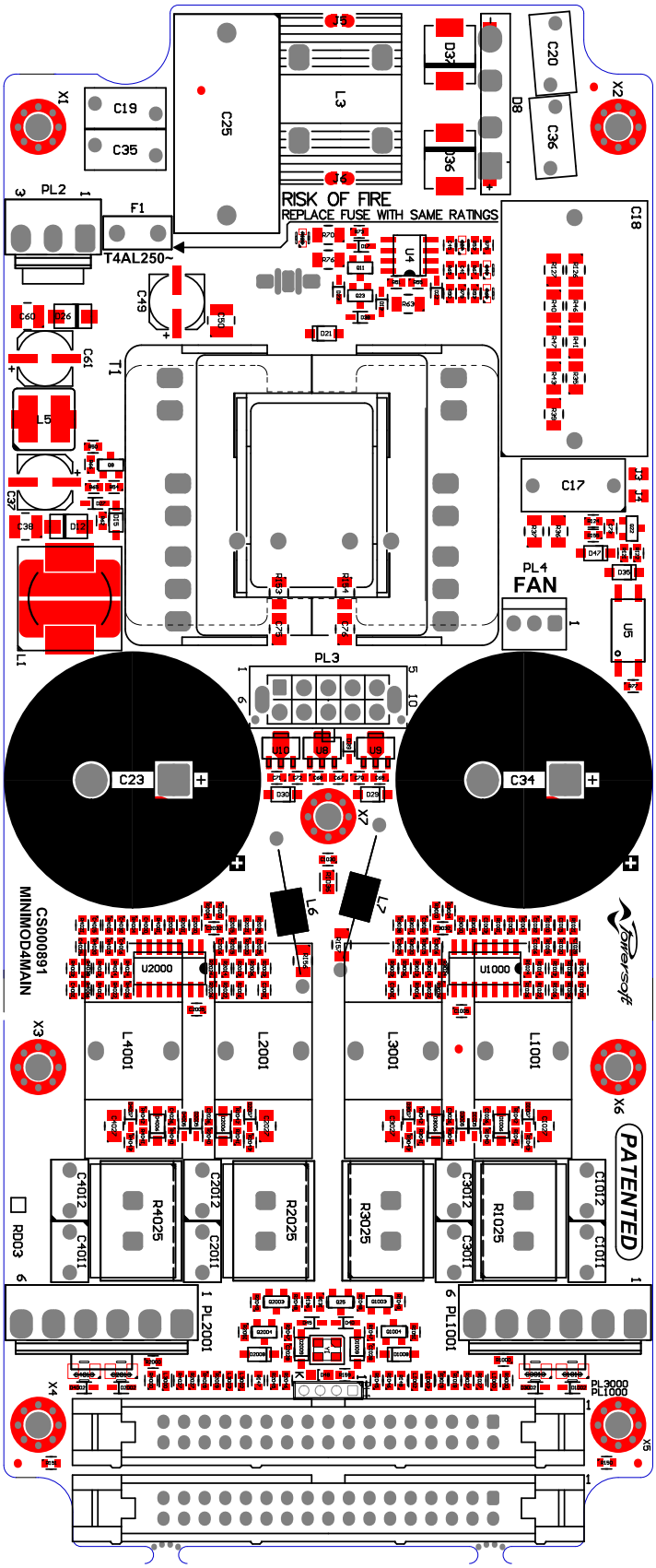

INDEX

5.1.2 Connectors

PL2 - AC Mains Connector	
PIN 1	AC MAINS L
PIN 2	not connected
PIN 3	AC MAINS N
	GROUND ⏚

PL1000	
PIN 1	SDPWS
PIN 2	READY 1
PIN 3	MODEL ID
PIN 4	+5VDC OUT
PIN 5	GND
PIN 6	IN 1+
PIN 7	IN 1-
PIN 8	GND
PIN 9	VOUT1MON
PIN 10	PROTECT 1
PIN 11	N/A
PIN 12	TEMPMON 12
PIN 13	+12VDC OUT
PIN 14	-12VDC OUT
PIN 15	MUTE 1
PIN 16	+VCCMON
PIN 17	-VCCMON
PIN 18	-VCCMON
PIN 19	+VCCMON
PIN 20	MUTE 2
PIN 21	-12VDC OUT
PIN 22	+12VDC OUT
PIN 23	TEMPMON 12
PIN 24	N/A
PIN 25	PROTECT 2
PIN 26	VOUT2MON
PIN 27	GND
PIN 28	IN 2-
PIN 29	IN 2+
PIN 30	GND
PIN 31	+5VDC OUT
PIN 32	MODEL ID
PIN 33	READY 2
PIN 34	SDPWS

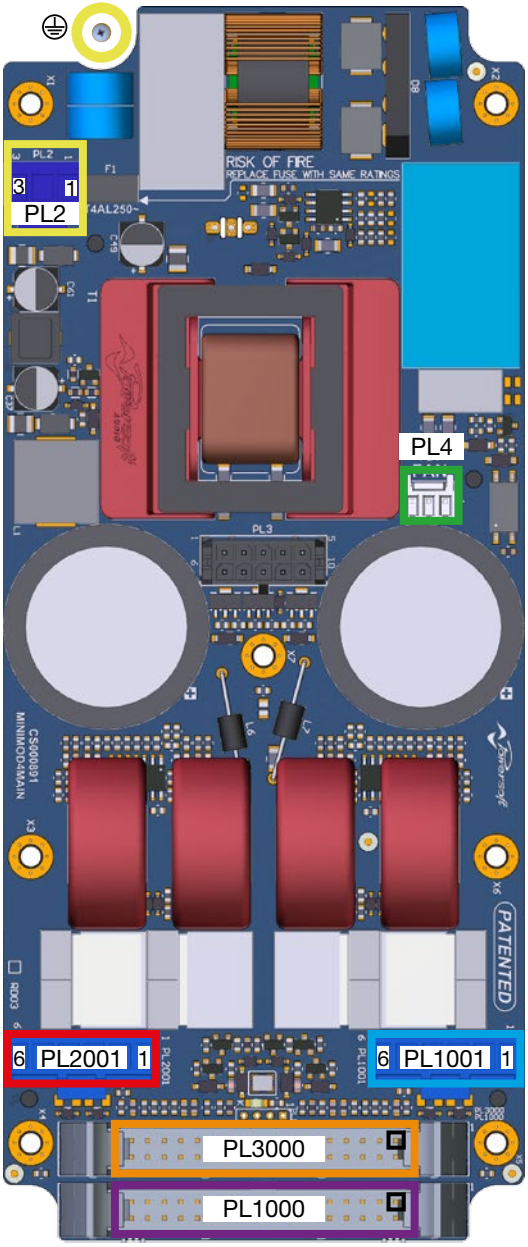

PL2001	
PIN 1	GND
PIN 2	OUT 2 (inverting)
PIN 3	GND
PIN 4	OUT 4 (inverting)
PIN 5	GND
PIN 6	PARALLEL

PL1001	
PIN 1	GND
PIN 2	OUT 1 (non inverting)
PIN 3	GND
PIN 4	OUT 3 (non inverting)
PIN 5	GND
PIN 6	PARALLEL

PL4 - FAN Connector	
PIN 1	GND
PIN 2	+12VDC, 100 mA max
PIN 3	GND

PL3000	
PIN 1	SDPWS
PIN 2	READY 3
PIN 3	MODEL ID
PIN 4	+5VDC OUT
PIN 5	GND
PIN 6	IN 3+
PIN 7	IN 3-
PIN 8	GND
PIN 9	VOUT3MON
PIN 10	PROTECT 3
PIN 11	N/A
PIN 12	TEMPMON 34
PIN 13	+12VDC OUT
PIN 14	-12VDC OUT
PIN 15	MUTE 3
PIN 16	+VCCMON
PIN 17	-VCCMON
PIN 18	-VCCMON
PIN 19	+VCCMON
PIN 20	MUTE 4
PIN 21	-12VDC OUT
PIN 22	+12VDC OUT
PIN 23	TEMPMON 34
PIN 24	N/A
PIN 25	PROTECT 4
PIN 26	VOUT4MON
PIN 27	GND
PIN 28	IN 4-
PIN 29	IN 4+
PIN 30	GND
PIN 31	+5VDC OUT
PIN 32	MODEL ID
PIN 33	READY 4
PIN 34	SDPWS

INDEX

5.1.3 34p IDCs (PL1000/PL3000)

PL1000			
Pin#	**Name**	**Type**	**Description**
1	SDPWS	IN	Power supply shut down. Active High. Enable enegy save mode
2	READY 1	OUT	Channel 1 PWM state. High when output 1 PWM generation is enabled
3	MODEL ID	OUT	Amplifier model ID resitor. Connected between pin 3 and GND
4	+5VDC OUT	POWER	Regulated +5VDC supply output
5	GND / AUXVSEL	PWR / IN	GND or AUXVSEL (amp dependant). When AUXVSEL, select AUX rails voltage (+/-12VDC or +/-15VDC)
6	IN 1+	IN	Channel 1 balanced input (non-inverting)
			Channel 1 unbalanced input (non-inverting, when shorting pin 7 to GND)
7	IN 1-	IN	Channel 1 balanced input (inverting)
			Channel 1 unbalanced input (inverting, when shorting pin 6 to GND)
8	GND	POWER	
9	VOUT1MON	OUT	Channel 1 output voltage monitor
10	PROTECT 1	OUT	Channel 1 output stage protection monitor. Low when output is in protect state
11	IOUT1MON	OUT	Channel 1 output current monitor
12	TEMPMON 12	OUT	Output stages 1&2 temperature monitor. Highest temperature between channel 1 and 2 is outputted
13	+12VDC OUT	POWER	Regulated +12VDC supply output (for audio circuits)
14	-12VDC OUT	POWER	Regulated -12VDC supply output (for audio circuits)
15	MUTE 1	IN	Channel 1 hardware mute. Active low. Disable output stage PWM generator
16	+VCCMON	OUT	Positive rail bus monitor
17	-VCCMON	OUT	Negative rail bus monitor
18	-VCCMON	OUT	Negative rail bus monitor
19	+VCCMON	OUT	Positive rail bus monitor
20	MUTE 2	IN	Channel 2 hardware mute. Active low. Disable output stage PWM generator
21	-12VDC OUT	POWER	Regulated -12VDC supply output (for audio circuits)
22	+12VDC OUT	POWER	Regulated +12VDC supply output (for audio circuits)
23	TEMPMON 12	OUT	Output stages 1&2 temperature monitor. Highest temperature between channel 1 and 2 is outputted
24	IOUT2MON	OUT	Channel 2 output current monitor
25	PROTECT 2	OUT	Channel 2 output stage protection monitor. Low when output is in protect state
26	VOUT2MON	OUT	Channel 2 output voltage monitor
27	GND	POWER	
28	IN 2-	IN	Channel 2 balanced input (inverting)
			Channel 2 unbalanced input (inverting, when shorting pin 29 to GND)
29	IN 2+	IN	Channel 2 balanced input (non-inverting)
			Channel 2 unbalanced input (non-inverting, when shorting pin 28 to GND)
30	GND	POWER	
31	+5VDC OUT	POWER	Regulated +5VDC supply output
32	MODEL ID	OUT	Amplifier model ID resitor. Connected between pin 32 and GND
33	READY 2	OUT	Channel 2 PWM state. High when output 2 PWM generation is enabled
34	SDPWS	IN	Power supply shut down. Active High. Enable enegy save mode

INDEX

Range	Scale Factor	Impedance
3,3VDC< VIH <12VDC	\	1KΩ
Shorted to READY 3 on PL3000 VOH= 4VDC | VOL= 1VDC	\	100KΩ
\	\	33KΩ
(+/-5%) Max current (total)= 20mA	\	\
AUXVSEL: Short to GND for +/-12VDC | Leave open for +/-15VDC	\	10KΩ Internal pull-up to +12VDC
1,41VRMS input for full output	\	Differential= 9,4KΩ / Common mode= 9,4KΩ (bal)
	\	9,4KΩ (unbal)
Absolute MAX input= 8VRMS	\	Differential= 9,4KΩ / Common mode= 3,1KΩ (bal)
	\	4,7KΩ (unbal)
0-2,2VDC	20V/V	4,5KΩ
Shorted to PROTECT 3 on PL3000 4VDC< VOH <5VDC | 0VDC< VOL <1VDC	\	4,7KΩ
N/A on MiniMod4	\	\
0-5VDC (heatsink temperature is outputted)	See table below	100KΩ
(+/-10%) Max current= 0,8A@12VDC or 0,6A@15VDC	\	\
(+/-10%) Max current= 0,2A@12VDC /15VDC	\	\
Shorted to MUTE 3 on PL3000 VIL(max)= 0,2VDC | Isink= 2mA(min)	\	10KΩ Internal pull-up to +9VDC
+2,2VDC MAX	20V/V	4,5KΩ
-2,2VDC MAX	20V/V	4,5KΩ
-2,2DC MAX	20V/V	4,5KΩ
+2,2VDC MAX	20V/V	4,5KΩ
Shorted to MUTE 4 on PL3000 VIL(max)= 0,2VDC | Isink= 2mA(min)	\	10KΩ Internal pull-up to +9VDC
(+/-10%) Max current= see pin 14	\	\
(+/-10%) Max current= see pin 13	\	\
Shorted to pin 12	See table below	See pin 12
N/A on MiniMod4	\	\
Shorted to PROTECT 4 on PL3000 4VDC< VOH <5VDC | 0VDC< VOL <1VDC	\	4,7KΩ
0-2,2VDC	20V/V	4,5KΩ
1,41VRMS input for full output	\	Differential= 9,4KΩ / Common mode= 9,4KΩ (bal)
	\	9,4KΩ (unbal)
Absolute MAX input= 8VRMS	\	Differential= 9,4KΩ / Common mode= 3,1KΩ (bal)
	\	4,7KΩ (unbal)
(+/-5%) Max current= see pin 4	\	\
\	\	33KΩ
Shorted to READY 4 on PL3000 (VOH= 4VDC | VOL= 1VDC)	\	100KΩ
See pin 1	\	\

INDEX

PL3000			
Pin#	**Name**	**Type**	**Description**
1	SDPWS	IN	Power supply shut down. Active High. Enable enegy save mode
2	READY 3	OUT	Channel 3 PWM state. High when output 3 PWM generation is enabled
3	MODEL ID	OUT	Amplifier model ID resitor. Connected between pin 3 and GND
4	+5VDC OUT	POWER	Regulated +5VDC supply output
5	GND / AUXVSEL	PWR / IN	GND or AUXVSEL (amp dependant). When AUXVSEL, select AUX rails voltage (+/-12VDC or +/-15VDC)
6	IN 3+	IN	Channel 3 balanced input (non-inverting)
			Channel 3 unbalanced input (non-inverting, when shorting pin 7 to GND)
7	IN 3-	IN	Channel 3 balanced input (inverting)
			Channel 3 unbalanced input (inverting, when shorting pin 6 to GND)
8	GND	POWER	
9	VOUT3MON	OUT	Channel 3 output voltage monitor
10	PROTECT 3	OUT	Channel 3 output stage protection monitor. Low when output is in protect state.
11	IOUT3MON	OUT	Channel 3 output current monitor
12	TEMPMON 34	OUT	Output stages 3&4 temperature monitor. Highest temperature between channel 3 and 4 is outputted
13	+12VDC OUT	POWER	Regulated +12VDC supply output (for audio circuits)
14	-12VDC OUT	POWER	Regulated -12VDC supply output (for audio circuits)
15	MUTE 3	IN	Channel 3 hardware mute. Active low. Disable output stage PWM generator
16	+VCCMON	OUT	Positive rail bus monitor
17	-VCCMON	OUT	Negative rail bus monitor
18	-VCCMON	OUT	Negative rail bus monitor
19	+VCCMON	OUT	Positive rail bus monitor
20	MUTE 4	IN	Channel 4 hardware mute. Active low. Disable output stage PWM generator
21	-12VDC OUT	POWER	Regulated -12VDC supply output (for audio circuits)
22	+12VDC OUT	POWER	Regulated +12VDC supply output (for audio circuits)
23	TEMPMON 34	OUT	Output stages 3&4 temperature monitor. Highest temperature between channel 3 and 4 is outputted
24	IOUT4MON	OUT	Channel 4 output current monitor
25	PROTECT 4	OUT	Channel 4 output stage protection monitor. Low when output is in protect state
26	VOUT4MON	OUT	Channel 4 output voltage monitor
27	GND	POWER	
28	IN 4-	IN	Channel 4 balanced input (inverting)
			Channel 4 unbalanced input (inverting, when shorting pin 29 to GND)
29	IN 4+	IN	Channel 4 balanced input (non-inverting)
			Channel 4 unbalanced input (non-inverting, when shorting pin 28 to GND)
30	GND	POWER	
31	+5VDC OUT	POWER	Regulated +5VDC supply output
32	MODEL ID	OUT	Amplifier model ID resitor. Connected between pin 32 and GND
33	READY 4	OUT	Channel 4 PWM state. High when output 1&2 PWM generation is enabled
34	SDPWS	IN	Power supply shut down. Active High. Enable enegy save mode

Range	Scale Factor	Impedance
See pin 1 on PL1000	\	\
Shorted to READY 1 on PL1000	\	See pin 2 on PL1000
\	\	33KΩ
(+/-5%) Max current= see PL1000	\	\
See pin 5 on PL1000	\	\
1,41VRMS input for full output	\	Differential= 9,4KΩ / Common mode= 9,4KΩ (bal)
	\	9,4KΩ (unbal)
Absolute MAX input= 8VRMS	\	Differential= 9,4KΩ / Common mode= 3,1KΩ (bal)
	\	4,7KΩ (unbal)
0-2,2VDC	20V/V	4,5KΩ
Shorted to PROTECT 1 on PL1000	\	See pin 10 on PL1000
N/A on MiniMod4	\	\
Shorted to pin 12 on PL1000	See table below	See pin 12 on PL1000
(+/-10%) Max current= see PL1000	\	\
(+/-10%) Max current= see PL1000	\	\
Shorted to MUTE 1 on PL1000	\	See pin 15 on PL1000
+2,2VDC MAX	20V/V	4,5KΩ
-2,2VDC MAX	20V/V	4,5KΩ
-2,2DC MAX	20V/V	4,5KΩ
+2,2VDC MAX	20V/V	4,5KΩ
Shorted to MUTE 2 on PL1000	\	See pin 20 on PL1000
(+/-10%) Max current= see PL1000	\	\
(+/-10%) Max current= see PL1000	\	\
Shorted to pin 12 on PL1000	See table below	See pin 12 on PL1000
N/A on MiniMod4	\	\
Shorted to PROTECT 4 on PL1000	\	See pin 25 on PL1000
0-2,2VDC	20V/V	4,5KΩ
1,41VRMS input for full output	\	Differential= 9,4KΩ / Common mode= 9,4KΩ (bal)
	\	9,4KΩ (unbal)
Absolute MAX input= 8VRMS	\	Differential= 9,4KΩ / Common mode= 3,1KΩ (bal)
	\	4,7KΩ (unbal)
(+/-5%) Max current= see PL1000	\	\
\	\	33KΩ
Shorted to READY 2 on PL1000	\	See pin 33 on PL1000
See pin 1 on PL1000	\	\

5.2 EVB
5.2.1 Block diagram

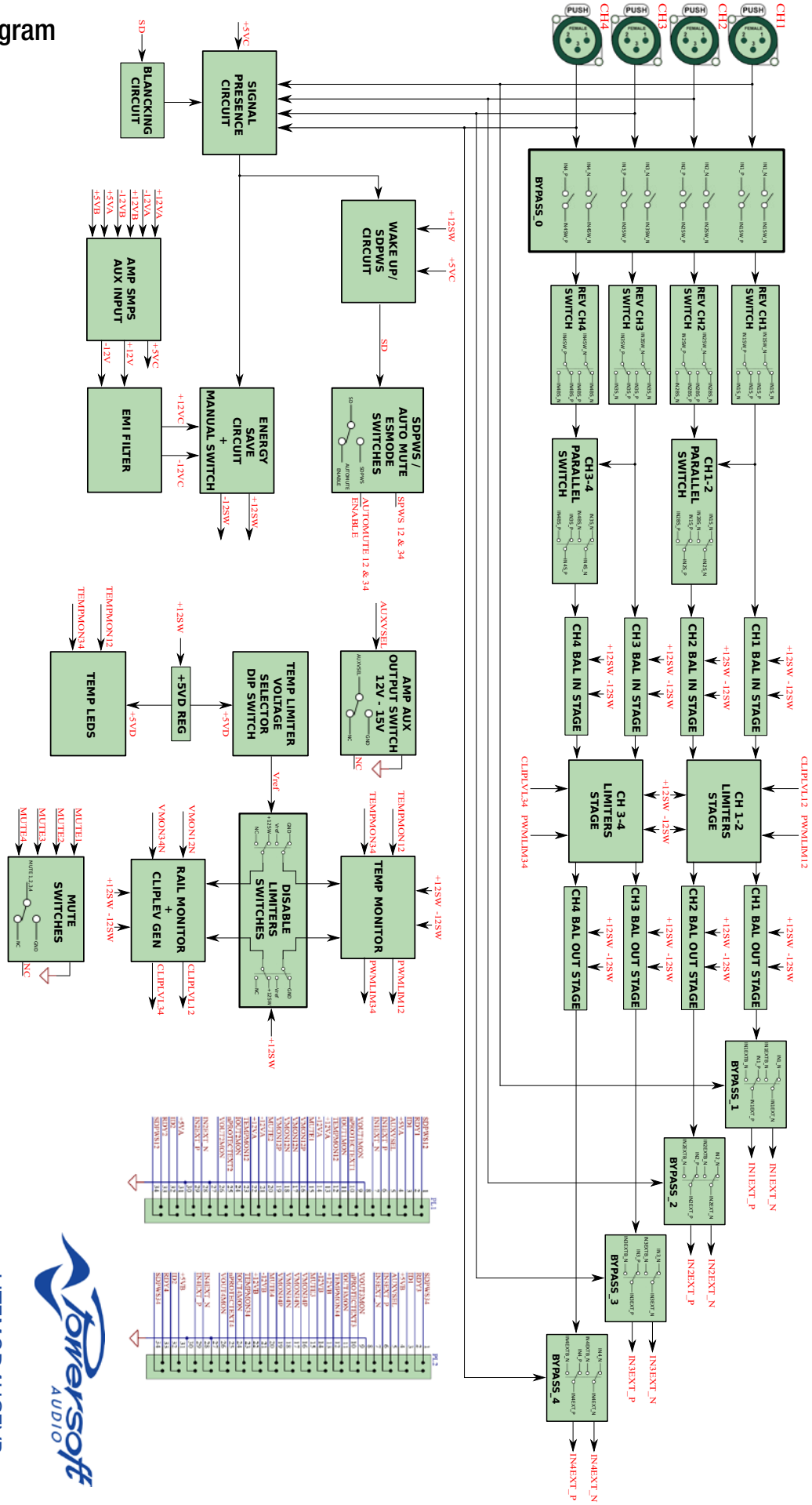

INDEX

5.2.2 Silkscreen

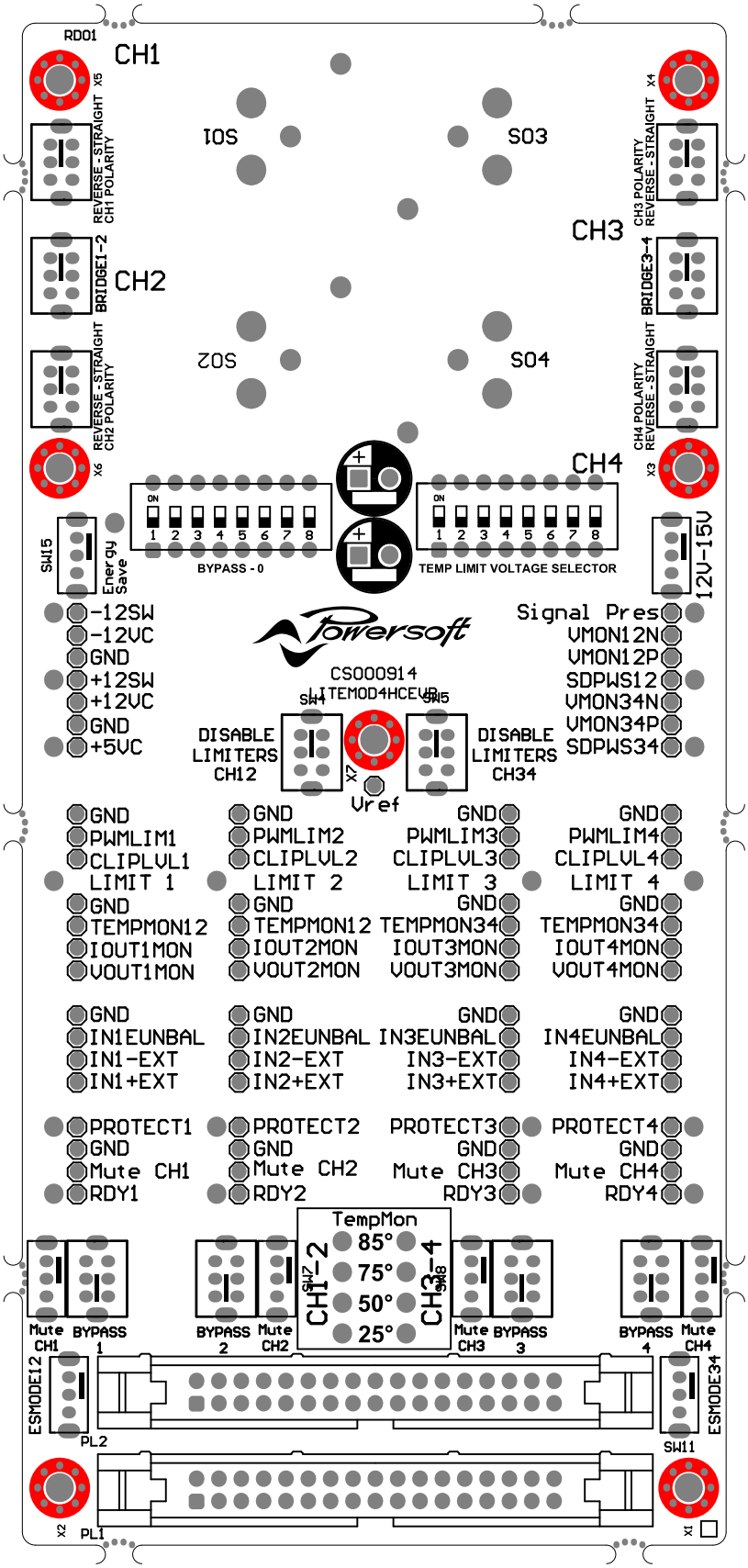

5.2.3 Schematic
CH1-2

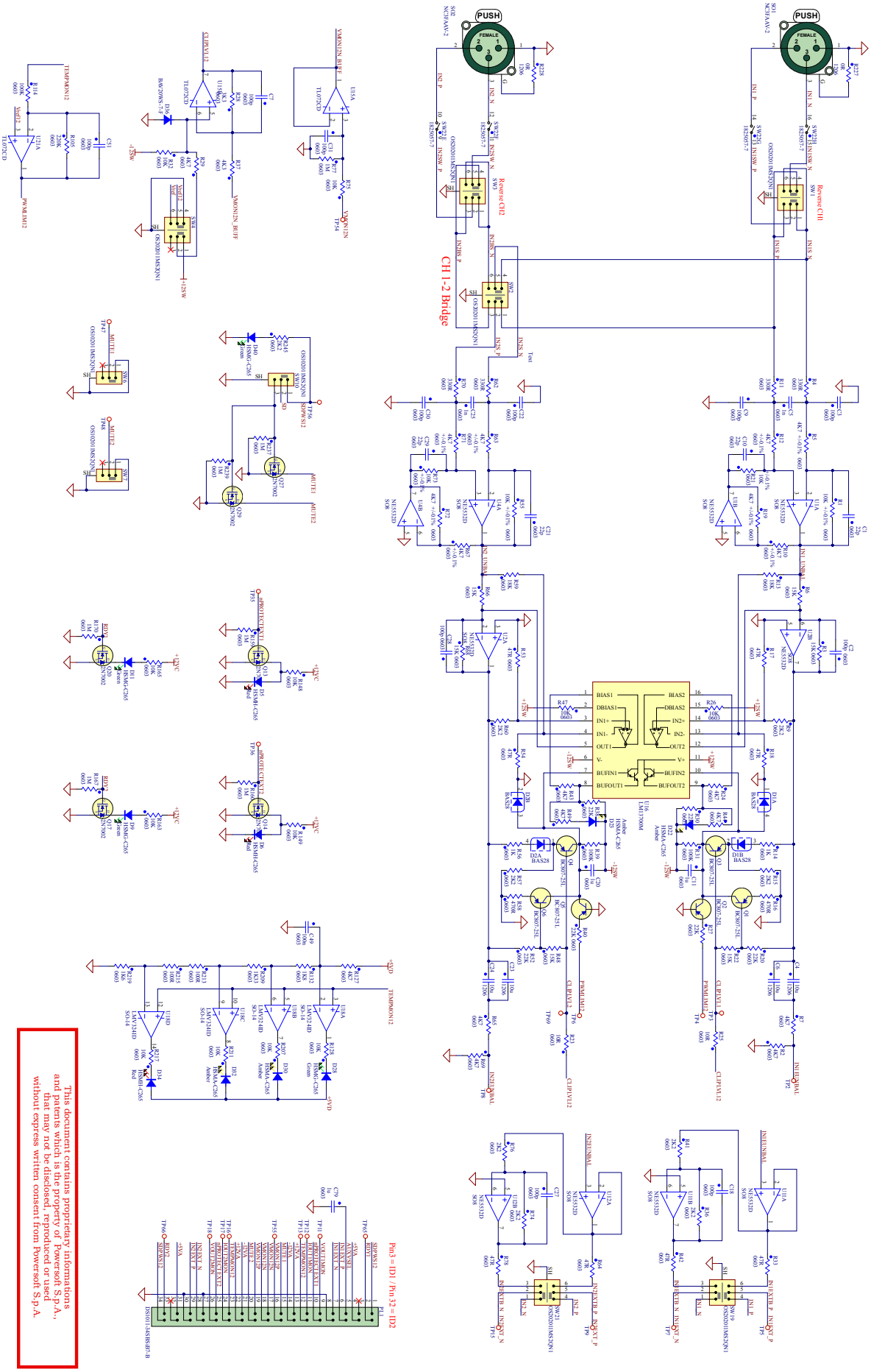

INDEX

CH3-4

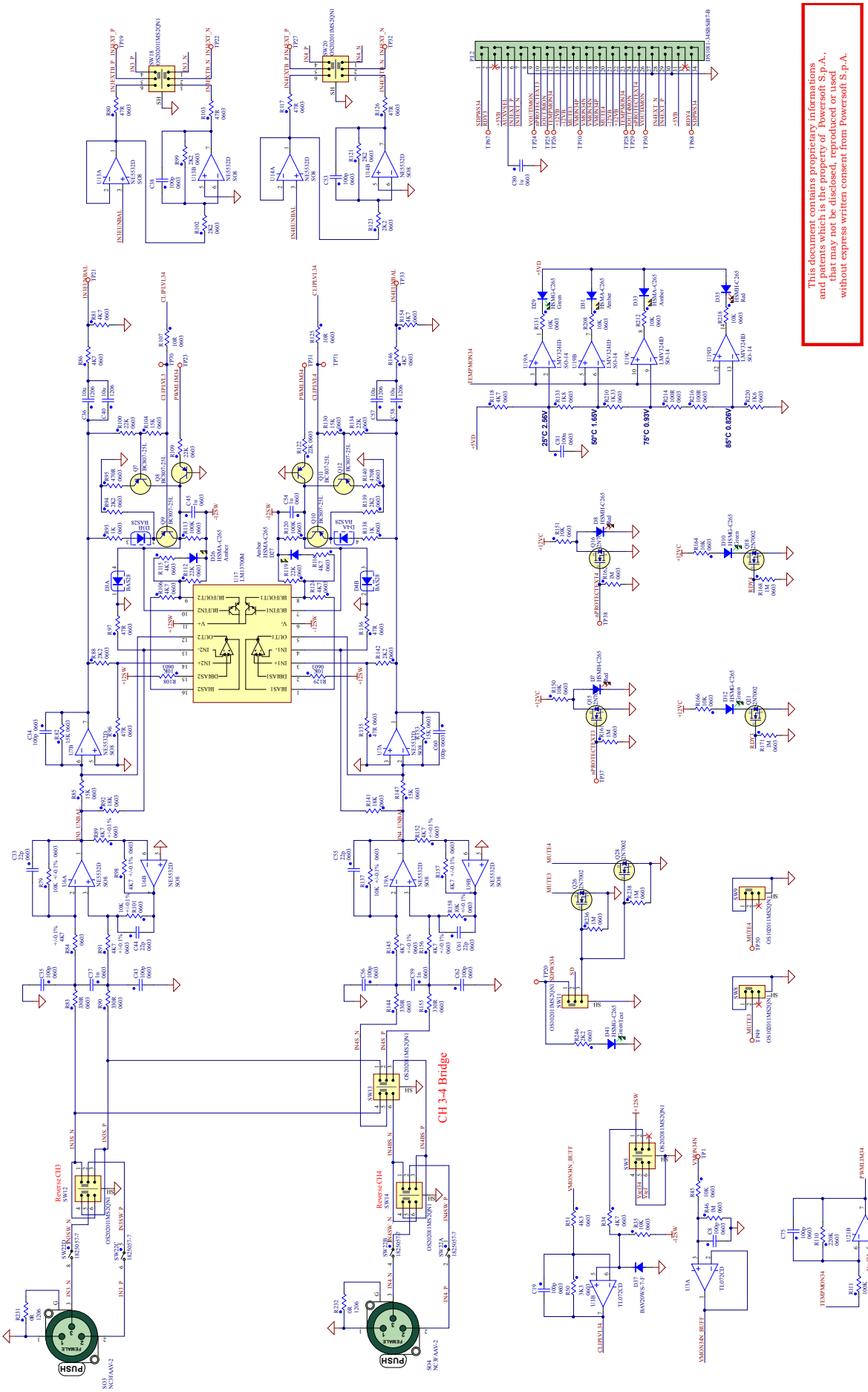

Power + Energy Save

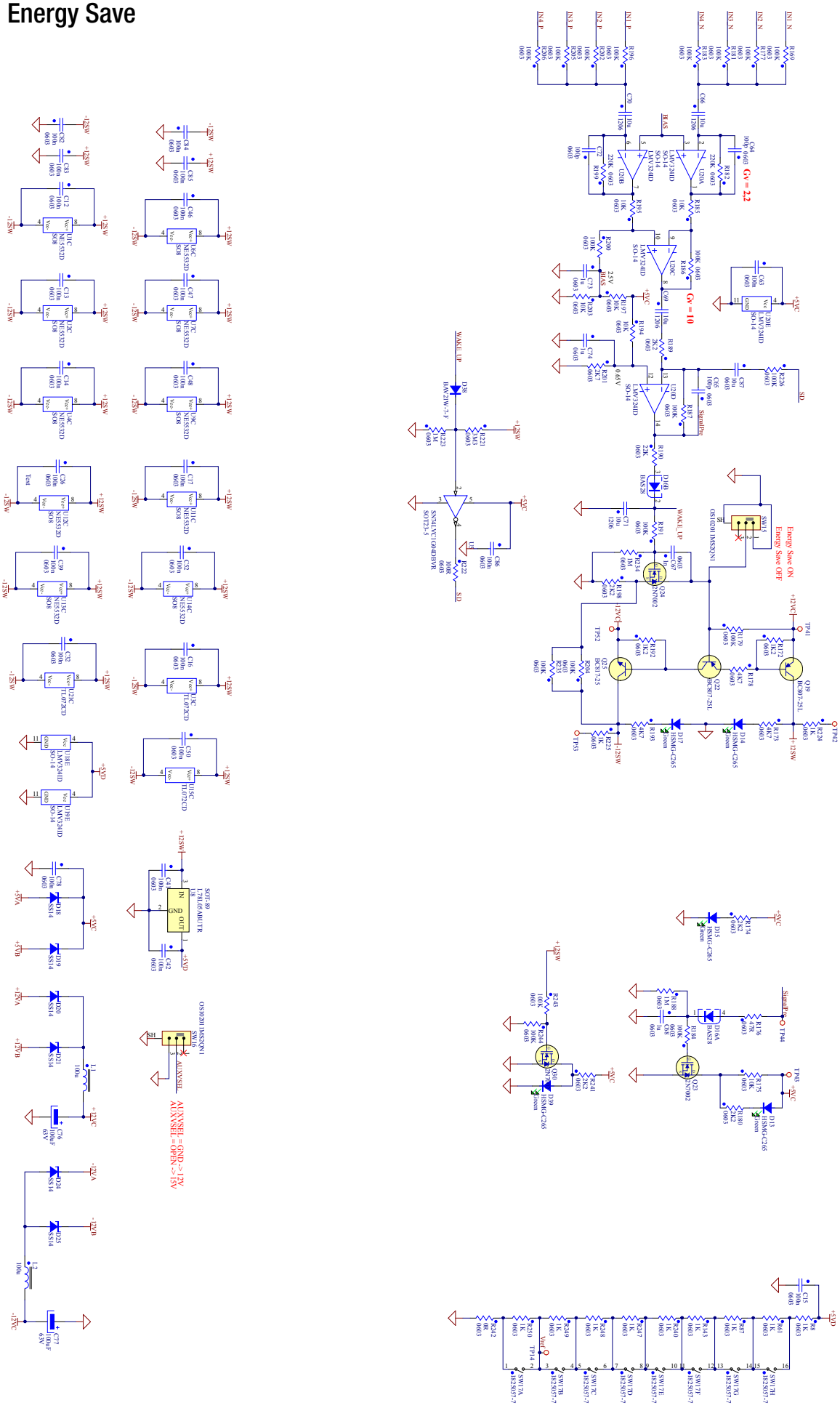

Intentionally left blank

Powersoft S.p.A.
Via Enrico Conti, 5
50018 Scandicci (FI) Italy

Tel: +39 055 735 0230
Fax: +39 055 735 6235

General inquiries: info@powersoft.it
Sales: sales@powersoft.it
Application & technical support: support@powersoft.it
Service & maintenance: service@powersoft.it

powersoft-audio.com